WATER MAIN RELOCATION SR 87 / US 23 / RIVERSIDE DRIVE AT ARKWRIGHT ROAD
GDOT PI 0015692
FOR THE
MACON WATER AUTHORITY

Macon Water Authority

537 HEMLOCK STREET
Macon, GA 31202-0108
(478) 464-5635 * Fax (478) 738-3864

DECEMBER 14, 2022

PROJECT LOCATION

CONSTRUCTION NOTES

1. CONTRACTOR WILL BE WORKING IN TEMPORARY CONSTRUCTION EASEMENTS, PERMANENT EASEMENTS, AND COUNTY RIGHT-OF-WAYS. CONTRACTOR SHALL BE RESPONSIBLE FOR ALL CLEARING AND GRUBBING OF EASEMENTS AND REMOVAL OF ALL DEBRIS INCLUDING STUMPS, BLAST ROCK, ETC. NO BURIAL OF CLEARED MATERIALS WILL BE ALLOWED.

2. CONTRACTOR SHALL REMOVE ALL DEBRIS AND HAVE SOIL EROSION CONTROL MEASURES IN PLACE BEFORE CONSTRUCTIONS BEGINS.

3. CONTRACTOR TO NOTIFY UTILITY PROTECTION AGENCY 72 HOURS PRIOR TO START OF WORK. PHONE 811. ALL UTILITY COMPANIES WHICH HAVE FACILITIES IN THE CONSTRUCTION AREA (TELEPHONE, ELECTRIC, ETC.) SHALL BE CONTACTED BY THE CONTRACTOR PRIOR TO THE BEGINNING OF CONSTRUCTION.

4. THE CONTRACTOR SHALL TAKE ALL NECESSARY PRECAUTIONS TO PREVENT ANY DISRUPTIONS OF UTILITY SERVICE. ANY UTILITIES DAMAGED MUST BE REPAIRED THE SAME DAY, UNLESS WRITTEN PERMISSION FROM UTILITY OWNER IS GIVEN.

5. EXISTING UTILITY LINES SHOWN ARE APPROXIMATE LOCATIONS ONLY. THE CONTRACTOR SHALL FIELD VERIFY ALL EXISTING UTILITY LINE LOCATIONS PRIOR TO ANY CONSTRUCTION. ANY DEVIATIONS FROM THE DESIGN LOCATION SHALL BE REPORTED TO THE ENGINEER PRIOR TO CONSTRUCTION. DAMAGE TO EXISTING UTILITY LINES RESULTING FROM THE CONTRACTOR'S ACTIONS SHALL BE REPAIRED AT THE CONTRACTOR'S EXPENSE. HE SHALL, AT HIS OWN EXPENSE, REPLACE OR REPAIR THE UTILITIES TO THEIR ORIGINAL CONDITION AND QUALITY, AS APPROVED BY THE CLIENT AND REPRESENTATIVE OF THE APPROPRIATE UTILITY COMPANY. SHOULD THE DAMAGED UTILITY LINE REQUIRE REPAIR BY THE RESPECTIVE UTILITY COMPANY, THE CONTRACTOR SHALL BE RESPONSIBLE FOR PAYING ALL COSTS ASSOCIATED WITH THE REPAIR INCLUING FINES AND ASSESSMENTS IMPOSED BY UTILITY COMPANY. CONTRACTOR SHALL NOTIFY ELECTRIC POWER PROVIDER 5 BUSINESS DAYS IN ADVANCE OF WORK ADJACENT TO POWER POLES. COORDINATE WITH UTILITY PROVIDER TO REMOVE OR RELOCATE UTILITY MAINS AND POLES AND PAY ALL ASSOCIATED COSTS.

6. WHEN CONSTRUCTION INVOLVES THE REMOVAL OF FENCE, POLES, MAILBOXES, SIGNS, SIDEWALKS, DRIVEWAYS, DRIVEWAY CULVERTS, TEMPORARY OR FIXED STRUCTURES, THE CONTRACTOR, AT HIS EXPENSE, SHALL PROVIDE FOR TEMPORARY ACCESS SERVICE OR CONTAINMENT TO THE AFFECTED PROPERTY. HE SHALL REPLACE SUCH ITEMS WITH SIMILAR OR BETTER MATERIALS AS SOON AS PRACTICAL, OR AS DIRECTED BY THE ENGINEER AND ALL SIGNAGE, ALL UTILITY COMPANIES WHICH HAVE FACILITIES IN THE CONSTRUCTION AREA (TELEPHONE, ELECTRIC, ETC.) SHALL BE CONTACTED BY THE CONTRACTOR PRIOR TO THE BEGINNING OF CONSTRUCTION.

7. PEDESTRIAN AND LOCAL VEHICULAR TRAFFIC SHALL BE MAINTAINED AT ALL TIMES DURING CONSTRUCTION. SAFETY DEVICES AND FLAGMEN SHALL BE PROVIDED BY THE CONTRACTOR, AT HIS EXPENSE. IF IT SHOULD BE NECESSARY, WRITTEN PERMISSION TO CLOSE THE CONSTRUCTION AREA TO TRAFFIC MUST BE OBTAINED FROM THE APPROPRIATE GOVERNMENT AGENCY PRIOR TO ANY STREET CLOSING. ALL CONSTRUCTION SIGNAGE, LIGHTED BARRIERS, ETC. SHALL BE INSTALLED PRIOR TO BEGINNING CONSTRUCTION.

8. ALL CONSTRUCTION STAKING SHALL BE BY THE CONTRACTOR, AT HIS EXPENSE. STAKING OF EASEMENT AND CLEARING LIMITS AND NEW CONSTRUCTION SHALL BE PERFORMED BY PROFESSIONAL SURVEYOR LICENSED IN GEORGIA.

9. ALL PROPERTY LINES ARE BASED ON DATA PROVIDED BY FIELD SURVEY DATA.

10. CONTRACTOR SHALL MAINTAIN FIELD "AS-BUILT" DRAWINGS AND SHALL MEASURE AND SHOW LOCATION OF ALL MANHOLES, GRAVITY MAINS, RIM/INVERT ELEVATIONS, ETC.

11. CONTRACTOR SHALL MATCH EXISTING LAWN AND GRASS TYPES WHEN REPAIRING DISTURBED AREAS.

12. ALL CROSS DRAINS AND DRIVEWAY CULVERTS MUST REMAIN OPEN AT ALL TIMES. CONTRACTOR SHALL BE RESPONSIBLE FOR ANY DAMAGE TO DRAINS AND CULVERTS.

13. CONTRACTOR SHALL PERFORM CONSTRUCTION IN A MANNER THAT WILL ALLOW VEHICULAR ACCESS TO EACH HOME OR BUSINESS DURING CONSTRUCTION.

14. ALL EROSION AND SEDIMENTATION CONTROL SHALL BE THE RESPONSIBILITY OF THE CONTRACTOR AND SHALL BE AS INDICATED ON THE PLANS AND AS DIRECTED BY THE ENGINEER.

15. A MINIMUM OF 10' OF HORIZONTAL SEPARATION SHALL BE MAINTAINED BETWEEN WATER & SEWER MAINS. A MINIMUM OF 18" VERTICAL SEPARATION SHALL BE MAINTAINED AT ALL CROSSINGS OF WATER & SEWER MAINS.

16. THE CONTRACTOR SHALL FURNISH MATERIALS AND MAKE THE CONNECTION TO ALL EXISTING PIPE LINES.

17. THE CONTRACTOR SHALL BEAR ALL COST OF WATER USED FOR FLUSHING AND TESTING REQUIRED BY THE SPECIFICATIONS. PROVISIONS TO PURCHASE SAID WATER FROM A SUPPLIER APPROVED OF BY THE ENGINEER.

18. ALL REQUIRED FITTINGS ARE NOT NECESSARILY SHOWN ON THESE DRAWINGS. CONTRACTOR SHALL FURNISH AND SUPPLY ALL FITTINGS NECESSARY TO CONSTRUCT GRAVITY SEWER MAIN.

19. BEFORE CONSTRUCTION BEGINS, THE CONTRACTOR SHALL PROVIDE THE OWNER AND ENGINEER THE CONTACT INFORMATION OF A PERSON WHO WILL BE AVAILABLE 24 HOURS A DAY TO CONTACT IN CASE OF EMERGENCY.

20. CONTRACTOR TO SAW-CUT EXISTING ASPHALT TO PROVIDE NEAT EDGE FOR PATCHING ON ALL STREETS (SEE DETAIL CLASS 'A' UTILITY PATCH DETAIL)

21. ALL CONSTRUCTION MATERIALS, METHODS AND INSTALLATION SHALL BE IN ACCORDANCE WITH MACON WATER AUTHORITY STANDARDS AND SPECIFICATIONS.

22. CONTRACTOR SHALL NOTIFY MWA STORMWATER ASSISTANT MANAGER, MONTE TOLLESON, (478) 954-8414, A MINIMUM OF 72 HOURS PRIOR TO BEGINNING CONSTRUCTION.

23. BYPASS PUMPING/DIVERSION OF STORMWATER WILL NOT BE MEASURED OR PAID FOR SEPARATELY BUT SHALL BE INCLUDED IN THE OVERALL BID PRICE.

PROJECT QUANTITIES

8" CL 350 DIP WATER MAIN	1684 L.F.
6" CL 350 DIP WATER MAIN	136 L.F.
8" GATE VALVE W/ BOX	7 EACH
6" GATE VALVE W/ BOX	5 EACH
THREE WAY FIRE HYDRANT	2 EACH

BENCHMARK INFORMATION

SEE GEORGIA DOT
PLANS FOR PI 0015692

NOTIFICATION CONTACTS

Owner and 24-Hour Contact
Joel Herndon, Chief Inspector
Macon Water Authority
537 Hemlock Street
Macon, GA 31202
Phone: 478-464-5639
Email: jherndon@maconwater.org

Engineer
Don L. Carter, P.E.
Carter Engineering Group,
6310 Peake Road, Suite 200
Macon, GA 31210
Office: 478-219-2600
Email: dcarter@carterenggrp.com

UTILITY CONTACTS

Gas
Cheryl Treadway, Account Executive, New Business Development
AGL Resources (Local Office)
5472 New Forsyth Rd, Macon, GA 31210
Local Office: (478) 476-2230
Cell: 404-391-3142
Email: Cheryl.treadway@aglresources.com

Electricity
Georgia Power
960 Key Street
Macon, GA 31204
Office: 888-655-5888

Telephone/Cable
OSP-Planning & Design Engineering
AT&T
1630 Eisenhower Parkway-Room 260
Macon, GA 31206
Phone: 478-788-1040
Email: mr8876@att.com

Water and Sewer
Joel Herndon, Chief Inspector
Macon Water Authority
537 Hemlock Street
Macon, GA 31202
Phone: 478-464-5639
Email: jherndon@maconwater.org

LEGEND

DESCRIPTION	EXISTING	NEW
PROPERTY LINE		
CONTOUR LINE	450	450
POWER POLE		
LIGHT POLE		
OVERHEAD POWER	OHP	
HIGH VOLTAGE LINE	HVL	
UNDERGROUND ELECTRICAL	E	
UNDERGROUND TELEPHONE	T	
UNDERGROUND FIBER OPTIC	FOC	
GAS LINE	G	G
WATER LINE	W	W
FIRE PROTECTION MAIN		FP
DOMESTIC WATER		DW
IRRIGATION MAIN		IRR
FIRE HYDRANT		
WATER VALVE		
SAN. SEWER W/ MANHOLE	SAN	
CLEANOUT		
DRAIN INLET		
CATCH BASIN D.O.T. STD. 1033D		
STORM DRAIN		
SILT FENCE & TYPE		SF1-C
SPOT ELEVATION	+	
CONCRETE PAVING		
CONCRETE SIDEWALKS		
PVC IRRIGATION SLEEVE		
SOIL BOUNDARY LINE		
SOIL TYPE		HyB
FENCE	x x x	x x x
FENCE W/ 3 STRANDS OF BARBED WIRE		
NOT IN CONTRACT		N.I.C.
TREES TO BE REMOVED		

INDEX TO DRAWINGS

SHEET NO.	TITLE
-	COVER SHEET
C1.1	EXISTING CONDITIONS
C1.2 - C1.6	WATER MAIN RELOCATION PLANS
C1.7	EROSION AND SEDIMENT CONTROL PLAN
C2.1	STORM WATER POLLUTION PREVENTION DETAILS
C2.2	WATER MAIN DETAILS
C2.3	JACK AND BORE CROSS SECTION

PROJECT NARRATIVE

THIS PROJECT CONSISTS OF RELOCATING APPROXIMATELY 1700 L.F. OF 8" CL 350 DIP WATER MAIN AND APPROXIMATELY 140 L.F. OF 6" CL 350 DIP WATER MAIN CURRENTLY IN CONFLICT WITH GDOT PROJECT PI 0015692

GEORGIA811
www.Georgia811.com
Contact 811 before you dig.

CARTER Engineering Group
6310 Peake Road, Suite 200
Macon, GA 31210
(478) 219-2600

LEVEL II CERTIFIED
DESIGN PROFESSIONAL # 2061
ISSUED: 11/2/2020 EXPIRES: 11/2/2023

CARTER Engineering Group
6310 Peake Road, Suite 200
Macon, GA 31210
(478) 219-2600

THIS DRAWING IS AN INSTRUMENT OF SERVICE AND SHALL REMAIN THE PROPERTY OF THE ENGINEER, AND SHALL NOT BE REPRODUCED, PUBLISHED OR USED IN ANY WAY WITHOUT THE CONSENT OF THE ENGINEER. THIS DRAWING SHALL NOT BE SCALED. © COPYRIGHT 2021 CARTER ENGINEERING GROUP, LLC.

GEORGIA811
www.Georgia811.com
Contact 811 before you dig.

ST

LEVEL II CERTIFIED
DESIGN PROFESSIONAL # 2061
ISSUED: 11/2/2020 EXPIRES: 11/2/2023

RELEASE DATES:

REV #	DATE	DESCRIPTION

MWA
Macon Water Authority

CLIENT:
MACON WATER AUTHORITY
MACON, GA

PROJECT:
WATER MAIN RELOCATION SR 87/ RIVERSIDE DRIVE AT ARKWRIGHT RD - GDOT PI 0013921

MACON, GA

DRAWN BY:	CHECKED BY:
CADD	DLC
PROJECT NUMBER:	DATE:
M0175.054	12/14/2022

GRAPHIC SCALE: 0 50 100
SCALE: 1" = 50'

DRAWING TITLE:
EXISTING CONDITIONS

DRAWING NUMBER:
C1.1

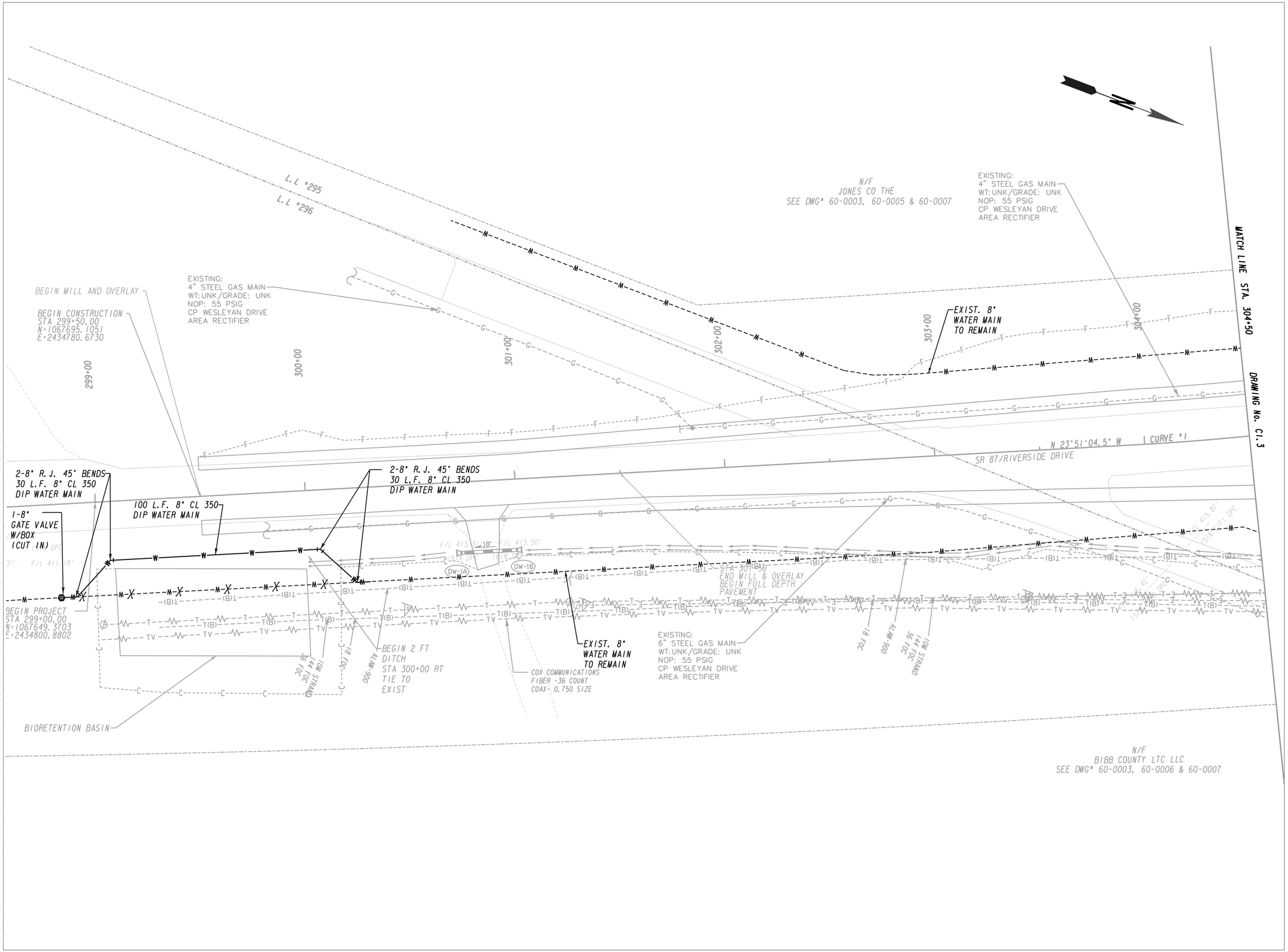

CARTER
Engineering
Group
6310 Peake Road, Suite 200
Macon, GA 31210
(478) 219-2600

THIS DRAWING IS AN INSTRUMENT OF SERVICE AND SHALL REMAIN THE PROPERTY OF THE ENGINEER, AND SHALL NOT BE REPRODUCED, PUBLISHED OR USED IN ANY WAY WITHOUT THE CONSENT OF THE ENGINEER. THIS DRAWING SHALL NOT BE SCALED. © COPYRIGHT 2021 CARTER ENGINEERING GROUP, LLC.

GEORGIA811
www.Georgia811.com
Contact 811 before you dig.

ST

LEVEL II CERTIFIED
DESIGN PROFESSIONAL # 2061
ISSUED: 11/2/2020 EXPIRES: 11/2/2023

RELEASE DATES:

REV #	DATE	DESCRIPTION

MWA
Macon Water Authority

CLIENT:
MACON WATER
AUTHORITY
MACON, GA

PROJECT:
WATER MAIN
RELOCATION SR 87/
RIVERSIDE DRIVE AT
ARKWRIGHT RD -
GDOT PI 0013921

MACON, GA

DRAWN BY:	CHECKED BY:
CADD	DLC
PROJECT NUMBER:	DATE:
M0175.054	12/14/2022

GRAPHIC SCALE:
0 20 40
SCALE: 1" = 20'

DRAWING TITLE:
WATER MAIN
RELOCATION PLAN

DRAWING NUMBER:
C1.2

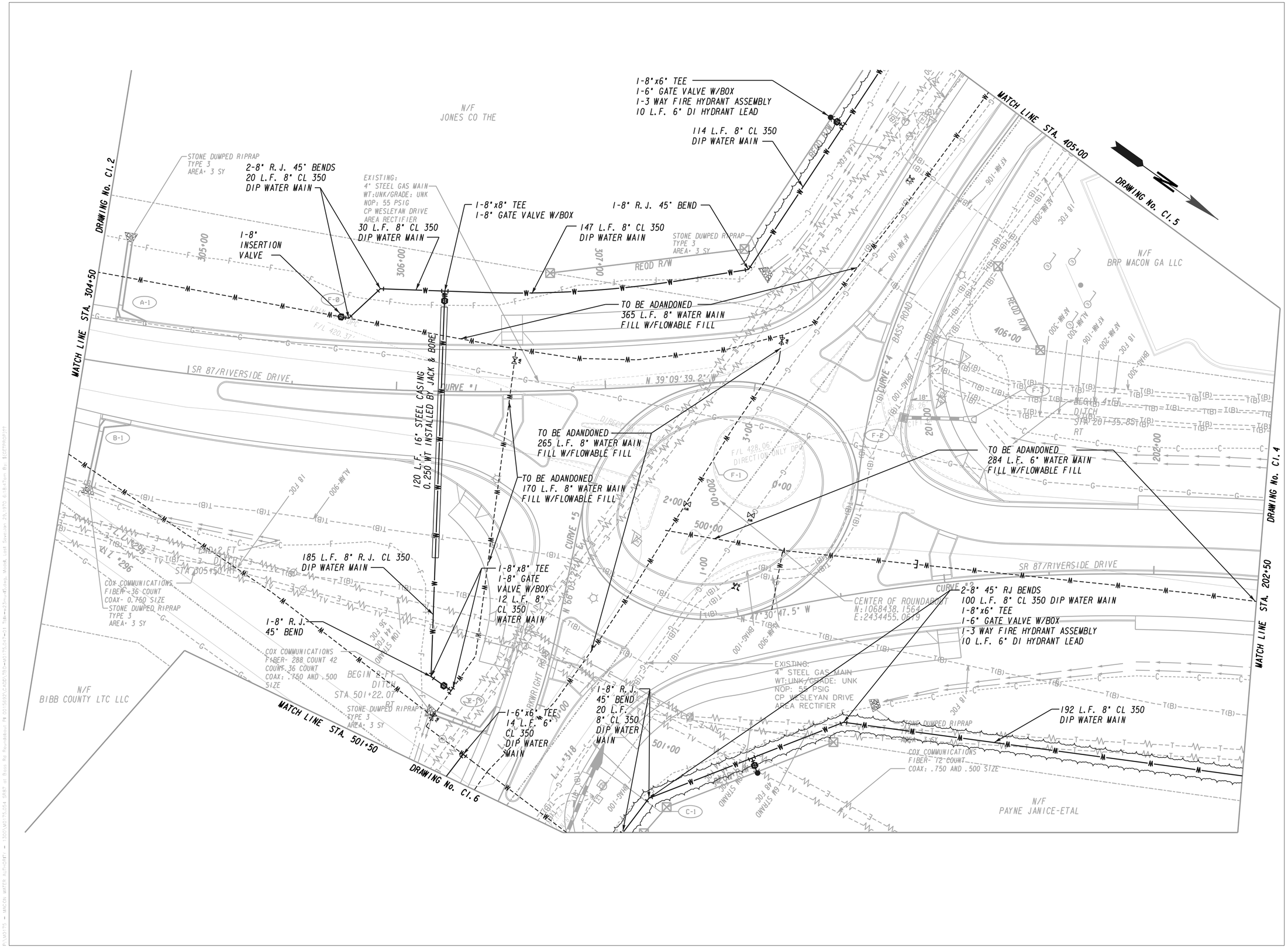

CARTER
Engineering
Group
6310 Peake Road, Suite 200
Macon, GA 31210
(478) 219-2600

THIS DRAWING IS AN INSTRUMENT OF SERVICE AND SHALL REMAIN THE PROPERTY OF THE ENGINEER, AND SHALL NOT BE REPRODUCED, PUBLISHED OR USED IN ANY WAY WITHOUT THE CONSENT OF THE ENGINEER. THIS DRAWING SHALL NOT BE SCALED. © COPYRIGHT 2021 CARTER ENGINEERING GROUP, LLC.

GEORGIA811
www.Georgia811.com
Contact 811 before you dig.

STAMP:

LEVEL II CERTIFIED
DESIGN PROFESSIONAL # 2061
ISSUED: 11/2/2020 EXPIRES: 11/2/2023

RELEASE DATES:

REV #	DATE	DESCRIPTION

MWA
Macon Water Authority

CLIENT:
MACON WATER
AUTHORITY
MACON, GA

PROJECT:
WATER MAIN
RELOCATION SR 87/
RIVERSIDE DRIVE AT
ARKWRIGHT RD -
GDOT PI 0013921

MACON, GA

DRAWN BY:	CHECKED BY:
CADD	DLC
PROJECT NUMBER:	DATE:
M0175.054	12/14/2022

GRAPHIC SCALE:
0 20 40
SCALE: 1" = 20'

DRAWING TITLE:
WATER MAIN
RELOCATION PLAN

DRAWING NUMBER:
C1.3

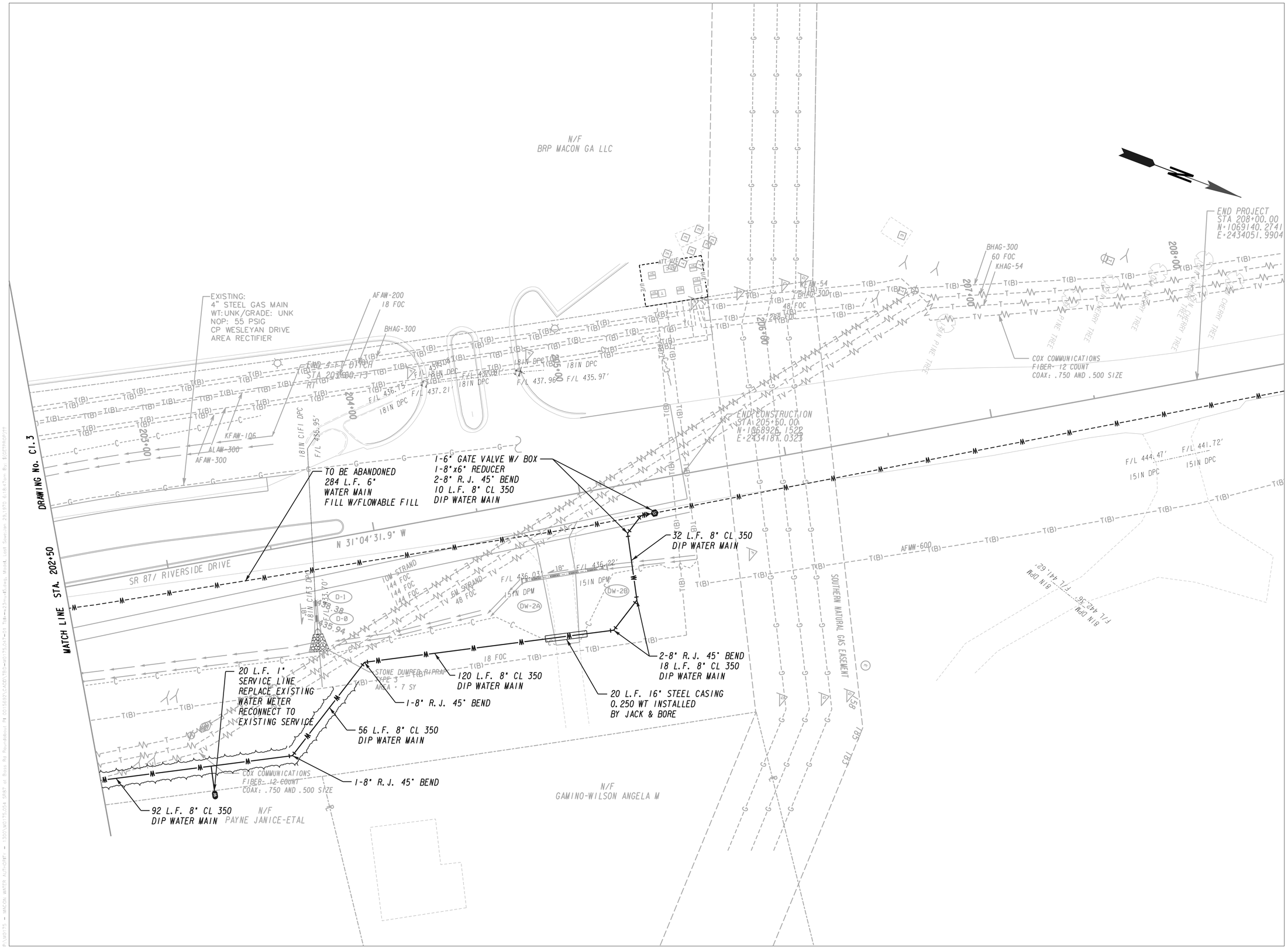

CARTER
Engineering
Group
6310 Peake Road, Suite 200
Macon, GA 31210
(478) 219-2600

THIS DRAWING IS AN INSTRUMENT OF SERVICE AND SHALL REMAIN THE PROPERTY OF THE ENGINEER, AND SHALL NOT BE REPRODUCED, PUBLISHED OR USED IN ANY WAY WITHOUT THE CONSENT OF THE ENGINEER. THIS DRAWING SHALL NOT BE SCALED. © COPYRIGHT 2021 CARTER ENGINEERING GROUP, LLC.

GEORGIA811
www.Georgia811.com
Contact 811 before you dig.

STAMP:

LEVEL II CERTIFIED
DESIGN PROFESSIONAL # 2061
ISSUED: 11/2/2020 EXPIRES: 11/2/2023

RELEASE DATES:

REV #	DATE	DESCRIPTION

MWA
Macon Water Authority

CLIENT:
MACON WATER
AUTHORITY
MACON, GA

PROJECT:
WATER MAIN
RELOCATION SR 87/
RIVERSIDE DRIVE AT
ARKWRIGHT RD -
GDOT PI 0013921

MACON, GA

DRAWN BY:	CHECKED BY:
CADD	DLC
PROJECT NUMBER:	DATE:
M0175.054	12/14/2022

GRAPHIC SCALE:
0 20 40
SCALE: 1" = 20'

DRAWING TITLE:
WATER MAIN
RELOCATION PLAN

DRAWING NUMBER:
C1.4

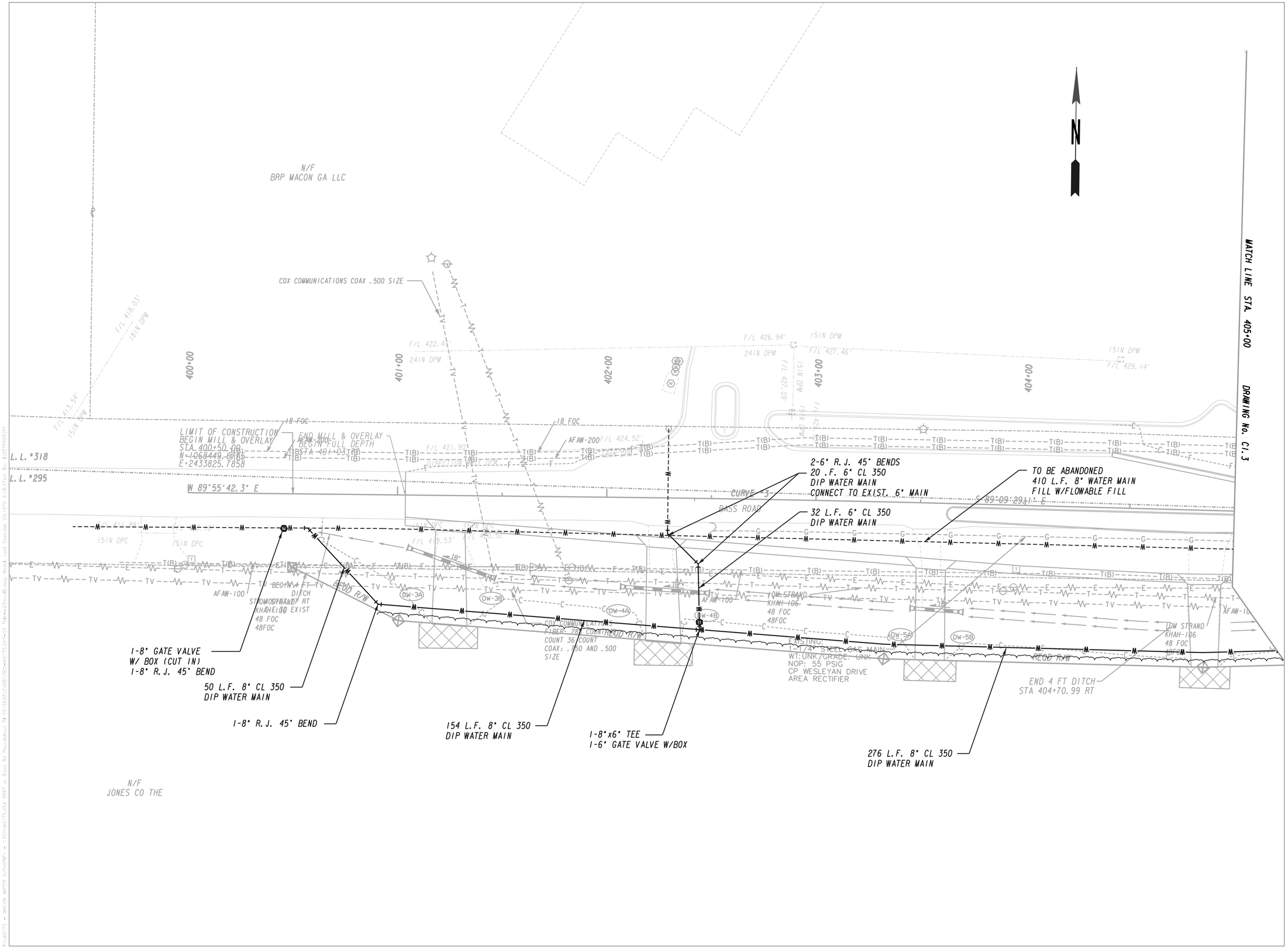

CARTER
Engineering
Group
6310 Peake Road, Suite 200
Macon, GA 31210
(478) 219-2600

THIS DRAWING IS AN INSTRUMENT OF SERVICE AND SHALL REMAIN THE PROPERTY OF THE ENGINEER, AND SHALL NOT BE REPRODUCED, PUBLISHED OR USED IN ANY WAY WITHOUT THE CONSENT OF THE ENGINEER. THIS DRAWING SHALL NOT BE SCALED. © COPYRIGHT 2021 CARTER ENGINEERING GROUP, LLC.

GEORGIA811
www.Georgia811.com
Contact 811 before you dig.

ST

LEVEL II CERTIFIED
DESIGN PROFESSIONAL # 2061
ISSUED: 11/2/2020 EXPIRES: 11/2/2023

RELEASE DATES:

REV #	DATE	DESCRIPTION

MWA
Macon Water Authority

CLIENT:
MACON WATER
AUTHORITY
MACON, GA

PROJECT:
WATER MAIN
RELOCATION SR 87/
RIVERSIDE DRIVE AT
ARKWRIGHT RD -
GDOT PI 0013921

MACON, GA

DRAWN BY:	CHECKED BY:
CADD	DLC
PROJECT NUMBER:	DATE:
M0175.054	12/14/2022

GRAPHIC SCALE:
0 20 40
SCALE: 1" = 20'

DRAWING TITLE:
WATER MAIN
RELOCATION PLAN

DRAWING NUMBER:
C1.5

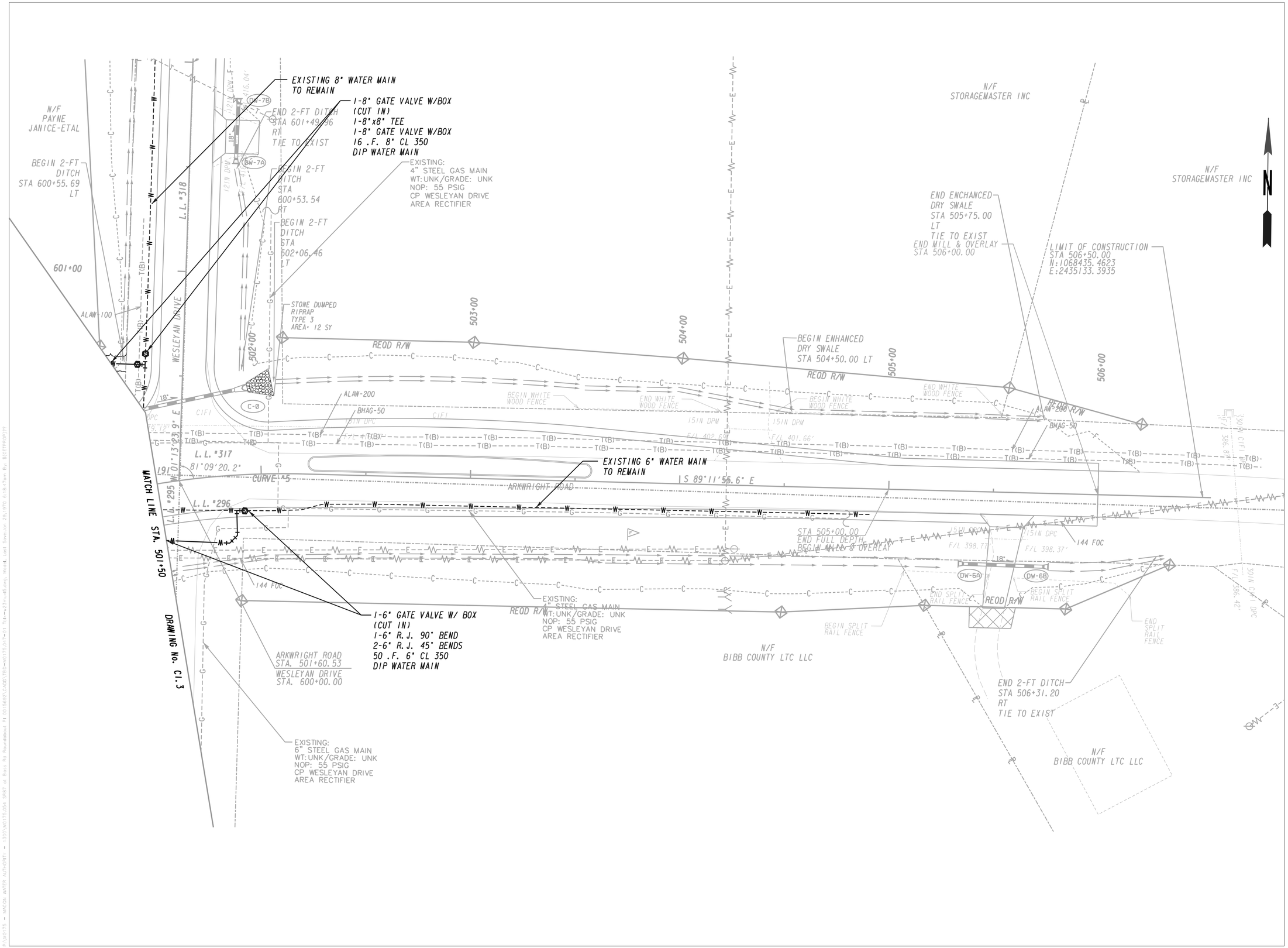

CARTER Engineering Group
6310 Peake Road, Suite 200
Macon, GA 31210
(478) 219-2600

THIS DRAWING IS AN INSTRUMENT OF SERVICE AND SHALL REMAIN THE PROPERTY OF THE ENGINEER, AND SHALL NOT BE REPRODUCED, PUBLISHED OR USED IN ANY WAY WITHOUT THE CONSENT OF THE ENGINEER. THIS DRAWING SHALL NOT BE SCALED. © COPYRIGHT 2021 CARTER ENGINEERING GROUP, LLC.

GEORGIA811
www.Georgia811.com
Contact 811 before you dig.

STAMP:

LEVEL II CERTIFIED
DESIGN PROFESSIONAL # 2061
ISSUED: 11/2/2020 EXPIRES: 11/2/2023

RELEASE DATES:

REV #	DATE	DESCRIPTION

MWA Macon Water Authority

CLIENT:
MACON WATER AUTHORITY
MACON, GA

PROJECT:
WATER MAIN RELOCATION SR 87/ RIVERSIDE DRIVE AT ARKWRIGHT RD - GDOT PI 0013921

MACON, GA

DRAWN BY:	CHECKED BY:
CADD	DLC
PROJECT NUMBER:	DATE:
M0175.054	12/14/2022

GRAPHIC SCALE: 0 20 40
SCALE: 1" = 20'

DRAWING TITLE:
WATER MAIN RELOCATION PLAN

DRAWING NUMBER:
C1.6

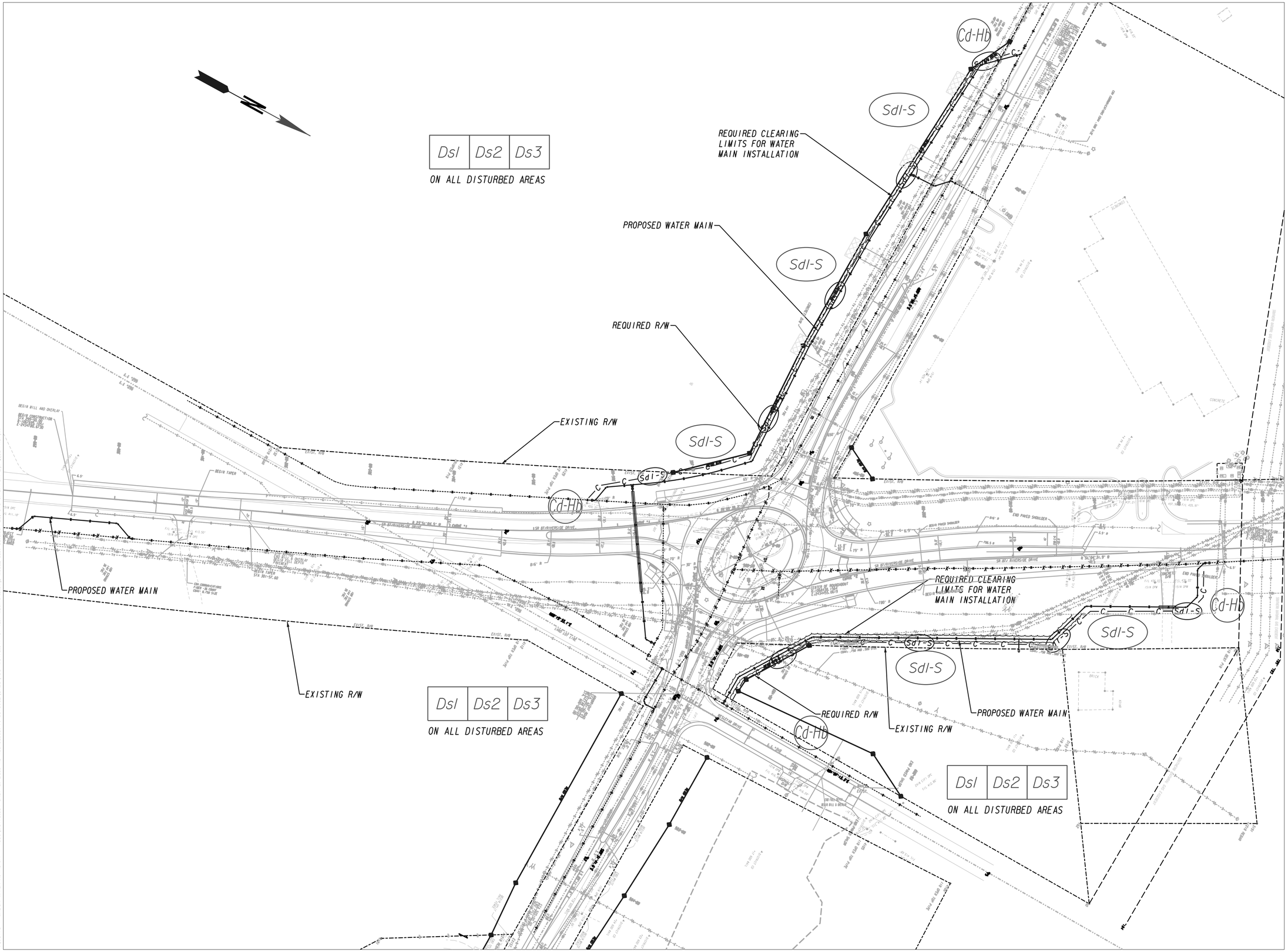

CARTER Engineering Group
6310 Peake Road, Suite 200
Macon, GA 31210
(478) 219-2600

THIS DRAWING IS AN INSTRUMENT OF SERVICE AND SHALL REMAIN THE PROPERTY OF THE ENGINEER, AND SHALL NOT BE REPRODUCED, PUBLISHED OR USED IN ANY WAY WITHOUT THE CONSENT OF THE ENGINEER. THIS DRAWING SHALL NOT BE SCALED. © COPYRIGHT 2021 CARTER ENGINEERING GROUP, LLC.

GEORGIA811 www.Georgia811.com
Contact 811 before you dig.

ST

LEVEL III CERTIFIED
DESIGN PROFESSIONAL # 2061
ISSUED: 11/2/2020 EXPIRES: 11/2/2023

RELEASE DATES:

REV #	DATE	DESCRIPTION

MWA Macon Water Authority

CLIENT:
MACON WATER AUTHORITY
MACON, GA

PROJECT:
WATER MAIN RELOCATION SR 87/ RIVERSIDE DRIVE AT ARKWRIGHT RD - GDOT PI 0013921

MACON, GA

DRAWN BY:	CHECKED BY:
CADD	DLC
PROJECT NUMBER:	DATE:
M0175.054	12/14/2022

GRAPHIC SCALE: 0 50 100
SCALE: 1" = 50'

DRAWING TITLE:
EROSION AND SEDIMENT CONTROL PLAN

DRAWING NUMBER:
C1.7

EXIT DIAGRAM

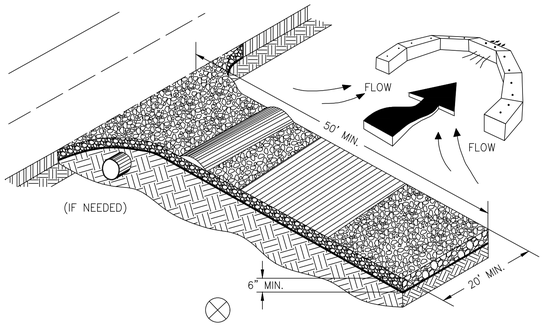

ENTRANCE ELEVATION

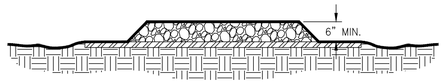

NOTES:
1. AVOID LOCATING ON STEEP SLOPES OR AT CURVES ON PUBLIC ROADS.
2. REMOVE ALL VEGETATION AND OTHER UNSUITABLE MATERIAL FROM THE FOUNDATION AREA, GRADE, AND CROWN FOR POSITIVE DRAINAGE.
3. AGGREGATE SIZE SHALL BE IN ACCORDANCE WITH NATIONAL STONE ASSOCIATION R-2 (1.5"-3.5" STONE).
4. GRAVEL PAD SHALL HAVE A MINIMUM THICKNESS OF 6".
5. PAD WIDTH SHALL BE EQUAL FULL WIDTH AT ALL POINTS OF VEHICULAR EGRESS, BUT NO LESS THAN 20'.
6. A DIVERSION RIDGE SHOULD BE CONSTRUCTED WHEN GRADE TOWARD PAVED AREA IS GREATER THAN 2%..
7. INSTALL PIPE UNDER THE ENTRANCE IF NEEDED TO MAINTAIN DRAINAGE DITCHES.
8. WHEN WASHING IS REQUIRED, IT SHOULD BE DONE ON AN AREA STABILIZED WITH CRUSHED STONE THAT DRAINS INTO AN APPROVED SEDIMENT TRAP OR SEDIMENT BASIN (DIVERT ALL SURFACE RUNOFF AND DRAINAGE FROM THE ENTRANCE TO A SEDIMENT CONTROL DEVICE).
9. WASHRACKS AND/OR TIRE WASHERS MAY BE REQUIRED DEPENDING ON SCALE AND CIRCUMSTANCE. IF NECESSARY, WASHRACK DESIGN MAY CONSIST OF ANY MATERIAL SUITABLE FOR TRUCK TRAFFIC THAT REMOVE MUD AND DIRT.
10. MAINTAIN AREA IN A WAY THAT PREVENTS TRACKING AND/OR FLOW OF MUD ONTO PUBLIC RIGHTS-OF-WAYS. THIS MAY REQUIRE TOP DRESSING, REPAIR AND/OR CLEANOUT OF ANY MEASURES USED TO TRAP SEDIMENT.

Co — CONSTRUCTION EXIT
N.T.S.

SOD LAYOUT AND PREPARATION

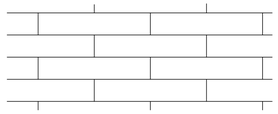

LAY SOD IN A STAGGERED PATTERN. BUTT THE STRIPS TIGHTLY AGAINST EACH OTHER. DO NOT LEAVE SPACES AND DO NOT OVERLAP. A SHARPENED MASON'S TROWEL IS A HANDY TOOL FOR TUCKING DOWN THE ENDS AND TRIMMING PIECES.

BUTTING: ANGLED ENDS CAUSED BY THE AUTOMATIC SOD CUTTER MUST BE MATCHED CORRECTLY.

DIRECTIONS FOR INITIAL MAINTENANCE

Step 1. ROLL SOD IMMEDIATELY TO ACHIEVE FIRM CONTACT WITH THE SOIL

Step 2. WATER TO A DEPTH OF 4" AS NEEDED. WATER WELL AS SOON AS THE SOD IS LAID.

Step 3. MOW WHEN THE SOD IS ESTABLISHED -- IN 2-3 WEEKS. SET THE MOWER HIGH (2"-3").

APPEARANCE OF GOOD SOD

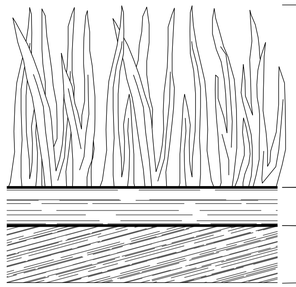

SHOOTS OR GRASS BLADES: GRASS SHOULD BE GREEN AND HEALTHY, MOWED AT A 2"-3" CUTTING HEIGHT.

THATCH: GRASS CLIPPINGS AND DEAD LEAVES (UP TO 1/2" THICK).

ROOT ZONE: SOIL AND ROOTS. SHOULD BE 1/2"-3/4" THICK WITH DENSE ROOT MAT FOR STRENGTH.

Ds4 — SODDING
N.T.S.

PIEDMONT VEGETATIVE COVERS

MONTH	TEMPORARY SEED	TEMP RATE/ACRE	PERMANENT SEED (LANDSCAPES/SHOULDERS)	PERM. RATE/ACRE	PERMANENT SEED (SLOPES 2:1 AND STEEPER)	PERM. RATE/ACRE
JANUARY	ANNUAL RYEGRASS	40 LB.	UNHULLED BERMUDA	40 LB.		
FEBRUARY	ANNUAL RYEGRASS	40 LB.	UNHULLED BERMUDA	40 LB.		
MARCH	ANNUAL RYEGRASS	40 LB.	HULLED BERMUDA	40 LB.	SERICEA LESPEDEZA & WEEPING LOVEGRASS	75 LB. 4 LB.
APRIL	BROWN TOP MILLET	40 LB.	HULLED BERMUDA	40 LB.	SERICEA LESPEDEZA & WEEPING LOVEGRASS	75 LB. 4 LB.
MAY	BROWN TOP MILLET	40 LB.	HULLED BERMUDA	40 LB.	SERICEA LESPEDEZA & WEEPING LOVEGRASS	75 LB. 4 LB.
JUNE	BROWN TOP MILLET	40 LB.	HULLED BERMUDA	40 LB.	SERICEA LESPEDEZA & WEEPING LOVEGRASS	75 LB. 4 LB.
JULY	BROWN TOP MILLET	40 LB.	HULLED BERMUDA	40 LB.	SERICEA LESPEDEZA & WEEPING LOVEGRASS	75 LB. 4 LB.
AUGUST	ANNUAL RYEGRASS	40 LB.	HULLED BERMUDA	40 LB.		
SEPTEMBER	ANNUAL RYEGRASS	40 LB.	UNHULLED BERMUDA	40 LB.		
OCTOBER	ANNUAL RYEGRASS	40 LB.	UNHULLED BERMUDA	40 LB.		
NOVEMBER	ANNUAL RYEGRASS	40 LB.	UNHULLED BERMUDA	40 LB.		
DECEMBER	ANNUAL RYEGRASS	40 LB.	UNHULLED BERMUDA	40 LB.		

TEMPORARY VEGETATION/ MULCHING - DS2

LIME: APPLY AGRICULTURAL LIME AT A RATE OF ONE TON PER ACRE.

FERTILIZER: APPLY 10-10-10 FERTILIZER AT A RATE OF 500 LBS PER ACRE.

MULCHING RATES: FOR TEMPORARY VEGETATION

1 - DRY STRAW: 2 TONS PER ACRE
2 - DRY HAY: 2.5 TONS PER ACRE
3 - WOOD CELLULOSE MULCH OR WOOD PULP FIBER: 500 LBS PER ACRE

PERMANENT VEGETATION/ MULCHING - DS3

LIME: APPLY AGRICULTURAL LIME AT A RATE OF ONE TO TWO TONS PER ACRE AS RECOMMENDED BY SOIL TESTS.

FERTILIZER: APPLY 6-12-12 FERTILIZER AT A RATE OF 1500 LBS PER ACRE.

MULCHING RATES: FOR PERMANENT VEGETATION

1 - DRY STRAW: 2 TONS PER ACRE
2 - DRY HAY: 2.5 TONS PER ACRE
3 - WOOD CELLULOSE MULCH OR WOOD PULP FIBER: 500 LBS PER ACRE

NOTE: PERMANENT VEGETATION INDICATED ABOVE IS REQUIRED FOR ALL DISTURBED AREAS OF THE SITE EXCEPT:
1 - AREAS TO BE SODDED
2 - SPORTS FIELDS WHICH ARE TO BE PERMANENTLY SEEDED WITH PRINCESS-77 BERMUDA 80 LBS./ACRE (SEE SPECS.)

POLYACRYLAMIDE - PM

CONTRACTOR SHALL INCORPORATE USE OF POLYACRYLAMIDE WITH ALL TEMPORARY AND PERMANENT GRASSING FOR AREAS THAT HAVE NOT BEEN STABILIZED WITH TEMPORARY OR PERMANENT COVER WITHIN 7 DAYS OF INITIAL DISTURBANCE.

ANIONIC PAM APPLICATION SHALL COMPLY WITH ALL FEDERAL, STATE AND LOCAL LAWS, RULES, OR REGULATIONS GOVERNING ANIONIC PAM. THE OPERATOR IS RESPONSIBLE FOR SECURING REQUIRED PERMITS.

USERS OF ANIONIC PAM SHALL OBTAIN AND FOLLOW ALL MATERIAL SAFETY DATA SHEET REQUIREMENTS AND MANUFACTURER'S RECOMMENDATIONS.

SIDE VIEW

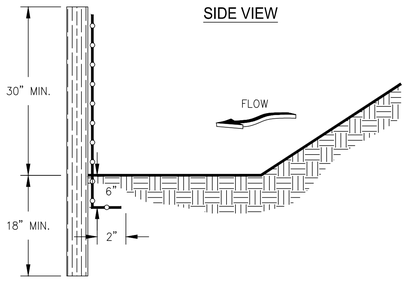

FRONT VIEW

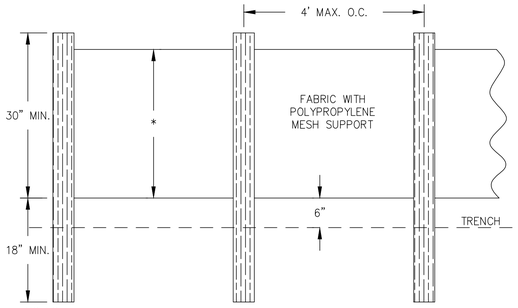

NOTES:
1. ALL SD1-S SILT FENCE SHALL BE A TYPE C-SYSTEM, WITH WOOD POSTS, AND TYPE C FABRIC AND A POLYPROPYLENE MESH SEWN BETWEEN POSTS AND FABRIC.

Sd1-S — SILT FENCE-TYPE SENSITIVE
N.T.S.

TYPICAL STRAW BALE CHECK DAM

PLAN

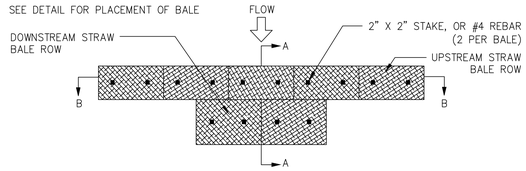

SECTION A-A

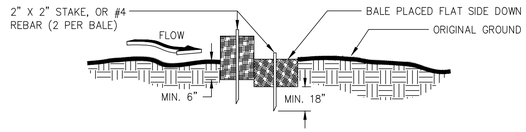

SECTION B-B

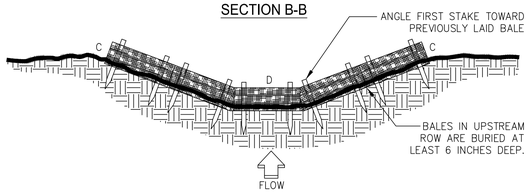

NOTES:
1. BALES SHOULD BE BOUND WITH WIRE OR NYLON STRING AND SHOULD BE PLACED IN ROWS WITH BALE ENDS TIGHTLY ABUTTING THE ADJACENT BALES.
2. REMOVE #4 REBAR AFTER STRAW BALES ARE NO LONGER IN PLACE.
3. POINT C OF SECTION B-B SHOULD ALWAYS BE HIGHER THAN POINT D.

Cd-HB — HAYBALE CHECKDAM
N.T.S.

STRUCTURAL PRACTICES

CODE	PRACTICE	DETAIL	MAP SYMBOL	DESCRIPTION
Cd	CHECKDAM			A small temporary barrier or dam constructed across a swale, drainage ditch or area of concentrated flow.
Co	CONSTRUCTION EXIT		Co (L-MIN.)	A crushed stone pad located at the construction site exit to provide a place for removing mud from tires thereby protecting public streets.
Sd1	SEDIMENT BARRIER		(INDICATE TYPE)	A barrier to prevent sediment from leaving the construction site. It may be sandbags, bales of straw or hay, brush, logs and poles, gravel, or a silt fence.
Sd2	INLET SEDIMENT TRAP			An impounding area created by excavating around a storm drain drop inlet. The excavated area will be filled and stabilized on completion of construction activities.

VEGETATIVE PRACTICES

CODE	PRACTICE	DETAIL	MAP SYMBOL	DESCRIPTION
Ds1	DISTURBED AREA STABILIZATION (WITH MULCHING ONLY)		Ds1	Establishing temporary protection for disturbed areas where seedlings may not have a suitable growing season to produce an erosion retarding cover.
Ds2	DISTURBED AREA STABILIZATION (WITH TEMP SEEDING)		Ds2	Establishing a temporary vegetative cover with fast growing seedings on disturbed areas.
Ds3	DISTURBED AREA STABILIZATION (WITH PERM SEEDING)		Ds3	Establishing a permanent vegetative cover such as trees, shrubs, vines, grasses, or legumes on disturbed areas.
Du	DUST CONTROL ON DISTURBED AREAS		Du	Controlling surface and air movement of dust on construction site, roadways and similar sites.

MULCHING MATERIALS:

SELECT ONE OF THE FOLLOWING MATERIALS AND APPLY AT THE DEPTH INDICATED:

1. DRY STRAW OR HAY SHALL BE APPLIED AT A DEPTH OF 2 TO 4 INCHES PROVIDING COMPLETE SOIL COVERAGE.
2. CUTBACK ASPHALT (SLOW CURLING) SHALL BE APPLIED AT 1200 GALLONS PER ACRE

APPLYING MULCH:

WHEN MULCH IS USED WITH OUT SEEDING, MULCH SHALL BE APPLIED TO PROVIDE FULL COVERAGE OF THE EXPOSED AREA.
1. DRY STRAW OR HAY MULCH SHALL BE APPLIED UNIFORMLY BY HAND OR BY MECHANICAL EQUIPMENT.
2. CUTBACK ASPHALT SHALL BE APPLIED UNIFORMLY. CARE SHOULD BE TAKEN IN AREAS OF PEDESTRIAN TRAFFIC DUE TO PROBLEMS OF "TRACKING IN" OR DAMAGE TO SHOES, CLOTHING, ETC.

ANCHORING MULCH:

1. STRAW OR HAY MULCH CAN BE PRESSED INTO THE SOIL WITH A DISK HARROW WITH THE DISK SET STRAIGHT OR WITH A SPECIAL "PACKER DISK". DISKS MAY BE SMOOTH OR SERRATED AND SHOULD BE 20 INCHES OR MORE IN DIAMETER AND 8 TO 12 INCHES APART. THE EDGES OF THE DISK SHOULD BE DULL ENOUGH NOT TO CUT THE MULCH BUT TO PRESS IT INTO THE SOIL LEAVING MULCH IN AN ERECT POSITION. STRAW OR HAY MULCH SHALL BE ANCHORED IMMEDIATELY AFTER APPLICATION.
2. STRAW OR HAY MULCH SPREAD WITH SPECIAL BLOWER-TYPE EQUIPMENT MAY BE ANCHORED WITH EMULSIFIED ASPHALT (GRADE AE-5 OR SS-1). THE ASPHALT EMULSION SHALL BE SPRAYED ONTO THE MULCH AS IT IS EJECTED FROM THE MACHINE. USE 100 GALLONS OF EMULSIFIED ASPHALT AND 100 GALLONS OF WATER PER TON OF MULCH. TACKIFIERS OR BINDERS CAN BE SUBSTITUTED FOR EMULSIFIED ASPHALT.

Ds1 — DISTURBED AREA STABILIZATION (W/ MULCH ONLY)

TEMPORARY SEDIMENT STORAGE CALCULATIONS

-CONTRIBUTING DRAINAGE BASIN: 2.1 ACRES
-REQUIRED SEDIMENT STORAGE: 67 C.Y./2.1 ACRES = 141 C.Y.
-DISTURBED ACREAGE IN BASIN: 2.1 ACRES
-TOTAL SEDIMENT STORAGE PROVIDED: 300 C.Y.
3,500 L.F. OF TYPE 'S' SILT FENCE PROVIDES 300 C.Y. OF STORAGE (SEE DETAIL)

-REQUIRED SEDIMENT STORAGE IS BEING MET.

WRITTEN RATIONALE FOR ABSENCE OF TEMPORARY SEDIMENT BASIN

THIS PROJECT SHALL INCLUDE A TOTAL LAND DISTURBANCE OF 3.0 ACRES AND A CONTRIBUTING DRAINAGE BASIN OF 2.1 ACRES. TEMPORARY SEDIMENT STORAGE SHALL BE PROVIDED BEHIND TYPE 'S' SILT FENCE (SEE DETAILS). BASED ON THE LIMITED WORK AREA & SHORT PROJECT DURATION, A TEMPORARY SEDIMENT BASIN IS NOT FEASIBLE OR NECESSARY.

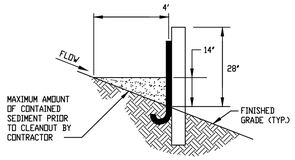

CALCULATION: 4'L X 1.16' H X 1' W X 0.5 = 2.32 C.F.
STORAGE PER 1 L.F. OF SILT FENCE.
A TOTAL OF 3,500 L.F. OF SILT FENCE INCLUDED ON PROJECT SHALL PROVIDE 8,120 C.F. (OR 300 C.Y.) OF STORAGE

SEDIMENT STORAGE BEHIND SILT FENCE
N.T.S.

TEMPORARY SEDIMENT STORAGE

CARTER Engineering Group
6310 Peake Road, Suite 200
Macon, GA 31210
(478) 219-2600

THIS DRAWING IS AN INSTRUMENT OF SERVICE AND SHALL REMAIN THE PROPERTY OF THE ENGINEER, AND SHALL NOT BE REPRODUCED, PUBLISHED OR USED IN ANY WAY WITHOUT THE CONSENT OF THE ENGINEER. THIS DRAWING SHALL NOT BE SCALED. © COPYRIGHT 2021 CARTER ENGINEERING GROUP, LLC

GEORGIA811 www.Georgia811.com
Contact 811 before you dig.

STAMP:

PRELIMINARY

LEVEL II CERTIFIED
DESIGN PROFESSIONAL # 2061
ISSUED: 11/2/2020 EXPIRES: 11/2/2023

RELEASE DATES:

REV #	DATE	DESCRIPTION

Macon Water Authority

CLIENT:
MACON WATER AUTHORITY
MACON, GA

PROJECT:
WATER MAIN RELOCATION SR 87/ RIVERSIDE DRIVE AT ARKWRIGHT RD - GDOT PI 0013921

MACON, GA

DRAWN BY:	CHECKED BY:
CADD	DLC
PROJECT NUMBER:	DATE:
M0175.054	12/14/2022

GRAPHIC SCALE:

SCALE: AS SHOWN

DRAWING TITLE:
STORMWATER POLLUTION PREVENTION DETAILS

DRAWING NUMBER:
C2.1

M0175.054 Details.dwg

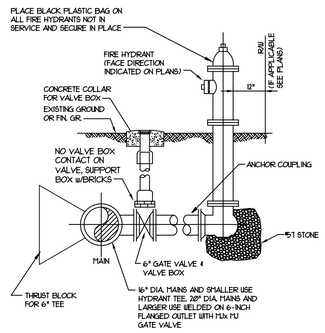

NOTE: RESTRAIN ALL FITTINGS WITH RETAINER GLANDS.

1 MWA - FIRE HYDRANT
N.T.S.

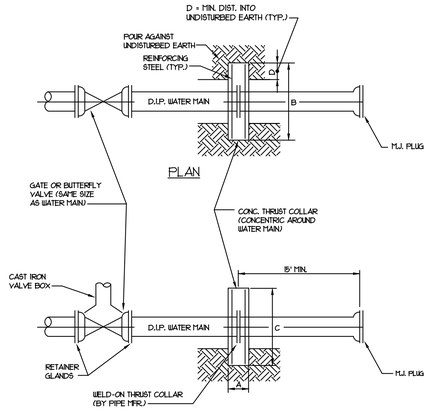

MAIN DIA	CONCRETE COLLAR DIM.				STEEL REINFORCING
	A	B	C	D	
36"	2'-0"	10'-0"	10'-0"	2'-0"	#3 @ 8" O.C. E.W.E.F.
24"	1'-9"	9'-0"	9'-0"	2'-6"	#3 @ 8" O.C. E.W.E.F.
20"	1'-6"	7'-8"	7'-8"	2'-0"	#3 @ 12" O.C. E.W.E.F.
16"	1'-3"	6'-6"	6'-6"	1'-6"	#3 @ 12" O.C. E.W.E.F.
12"	1'-2"	5'-3"	5'-3"	1'-0"	#3 @ 12" O.C. E.W.E.F.
6" or 8"	1'-0"	4'-0"	4'-0"	0'-8"	#3 @ 12" O.C. E.W.E.F.

TEST PRESSURE: 250 P.S.I.
SOIL BEARING PRESSURE: 3000 P.S.F.

6 MWA - WATER MAIN TERMINATION
N.T.S.

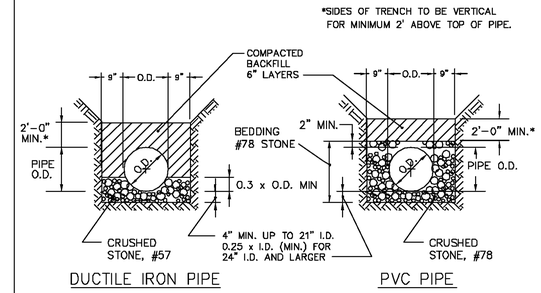

BEDDING MATERIAL USE:
#57 STONE FOR D.I.P.
#78 STONE FOR PVC

9

STATUS	BY	APPROVED	DATE	MACON WATER AUTHORITY STANDARD DETAILS	RECOMMENDED BY THE MACON WATER AUTHORITY ENGINEERING DEPT.
ORIGINAL				PIPE BEDDING AND HAUNCHING DETAILS N.T.S.	DRAWING NUMBER OT-2
REVISION					

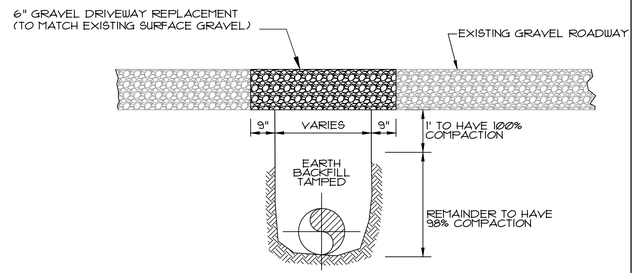

11 DETAIL - GRAVEL DRIVEWAY REPLACEMENT
N.T.S.

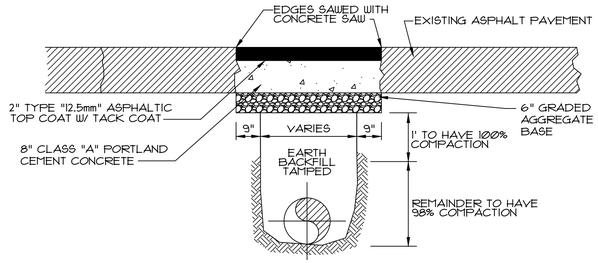

12 DETAIL - CLASS A UTILITY PATCH (FOR ASPHALT STREETS AND DRIVEWAYS)
N.T.S.

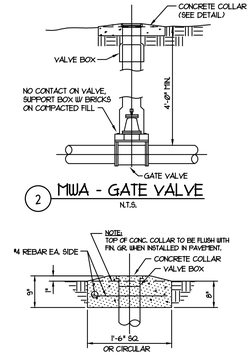

3 MWA - CONCRETE COLLAR FOR VALVE BOX
N.T.S.

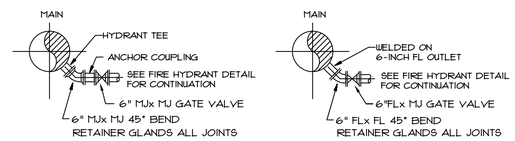

7 MWA - BLOW-OFF CONNECTION DETAIL
N.T.S.

NOTE: CONSTUCTION IN GEORGIA DEPARTMENT OF TRANSPORTATION RIGHT-OF-WAY SHALL CONFORM TO D.O.T. STD. SPECIFICATIONS

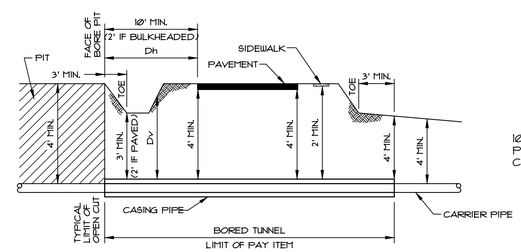

NOTE: Dh SHALL NOT BE LESS THAN Dv UNLESS BULKHEADED

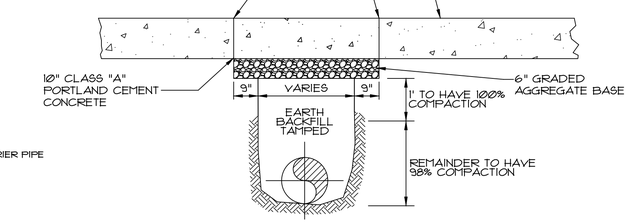

13 DETAIL - CONCRETE DRIVEWAY REPLACEMENT
N.T.S.

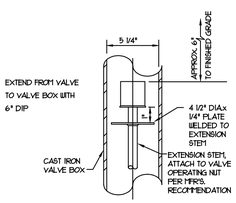

4 MWA - EXTENSION STEM
N.T.S.

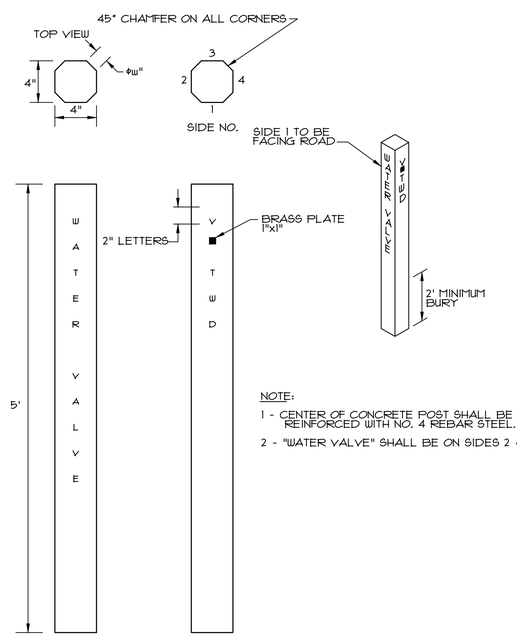

NOTE:
1 - CENTER OF CONCRETE POST SHALL BE REINFORCED WITH NO. 4 REBAR STEEL.
2 - "WATER VALVE" SHALL BE ON SIDES 2 & 4.

8 DETAIL - WATER VALVE INDICATOR POST
N.T.S.

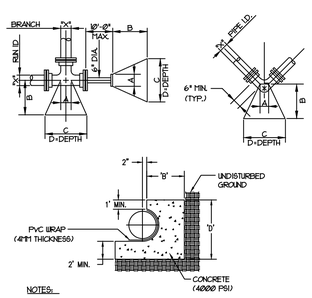

NOTES:
1. 'A', 'B', 'C' & 'D' WILL BE DETERMINED BY USING THE ATTACHED CHART.
2. MEGALUG RESTRAINTS SHALL BE USED ON ALL BENDS.

BLOCKING DIMENSIONS TEES AND DEAD ENDS				
XX	A	B	C	D
16"	1'-8"	3'-9"	1'-3"	5'-0"
12"	1'-3"	3'-3"	5'-11"	3'-6"

NOTE: FOR BLOCKING TEES, REFER TO PIPE EQUAL TO DIAMETER OF TEE BRANCH.

200 PSI TEST PRESSURE
1500 PSF SOIL BEARING

BLOCKING DIMENSIONS BENDS					
	XX	A	B	C	D
90°	16"	1'-8"	5'-4"	9'-3"	5'-6"
	12"	1'-3"	4'-3"	7'-4"	4'-0"
	6"	0'-8"	2'-8"	4'-6"	1'-9"
45°	16"	1'-8"	3'-8"	1'-0"	4'-0"
	12"	1'-3"	2'-6"	4'-10"	3'-3"
	6"	1'-3"	2'-6"	4'-10"	3'-3"

XX = DIAMETER OF PIPE TO BE BLOCKED
NOTE: WRAP THE FITTINGS BEFORE POURING CONCRETE.

5 MWA - TYPICAL BLOCKING
N.T.S.

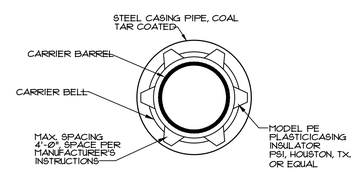

CROSS SECTION
CARRIER IN CASING

10 DETAIL - HIGHWAY UTILITY CROSSING
N.T.S.

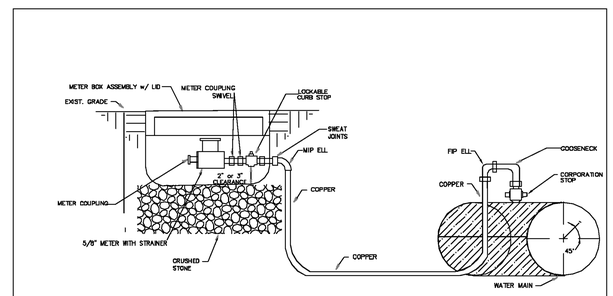

14

STATUS	BY	APPROVED	DATE	MACON WATER AUTHORITY STANDARD DETAILS	RECOMMENDED BY THE MACON WATER AUTHORITY ENGINEERING DEPT.
ORIGINAL				WATER SERVICE & METER CONNECTION DETAILS N.T.S. (SIZES 5/8" & 1")	DRAWING NUMBER W-3
REVISION					

CARTER Engineering Group
6310 Peake Road, Suite 200
Macon, GA 31210
(478) 219-2600

THIS DRAWING IS AN INSTRUMENT OF SERVICE AND SHALL REMAIN THE PROPERTY OF THE ENGINEER, AND SHALL NOT BE REPRODUCED, PUBLISHED OR USED IN ANY WAY WITHOUT THE CONSENT OF THE ENGINEER. THIS DRAWING SHALL NOT BE SCALED. © COPYRIGHT 2021 CARTER ENGINEERING GROUP, LLC.

GEORGIA811 www.Georgia811.com
Contact 811 before you dig.

STAMP:
PRELIMINARY

LEVEL II CERTIFIED
DESIGN PROFESSIONAL # 2061
ISSUED: 11/2/2020 EXPIRES: 11/2/2023

RELEASE DATES:

REV #	DATE	DESCRIPTION

Macon Water Authority

CLIENT:
MACON WATER AUTHORITY
MACON, GA

PROJECT:
WATER MAIN RELOCATION SR 87/ RIVERSIDE DRIVE AT ARKWRIGHT RD - GDOT PI 0013921

MACON, GA

DRAWN BY:	CHECKED BY:
CADD	DLC
PROJECT NUMBER:	DATE:
M0175.054	12/14/2022

GRAPHIC SCALE:

SCALE: AS SHOWN

DRAWING TITLE:
WATER MAIN DETAILS

DRAWING NUMBER:
C2.2

M0175.054 Details.dwg

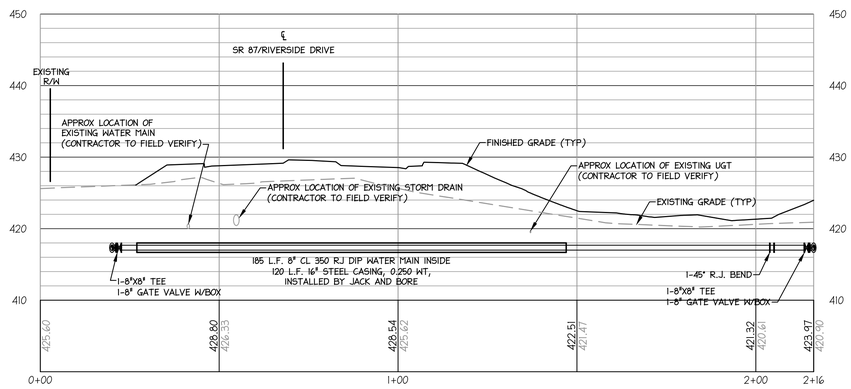

WATER MAIN JACK AND BORE CROSS SECTION
STA 306+22 SR 87/RIVERSIDE DRIVE

SCALE: HORZ. 1"=20'
VERT. 1"=10'

CARTER Engineering Group
6310 Peake Road, Suite 200
Macon, GA 31210
(478) 219-2600

THIS DRAWING IS AN INSTRUMENT OF SERVICE AND SHALL REMAIN THE PROPERTY OF THE ENGINEER, AND SHALL NOT BE REPRODUCED, PUBLISHED OR USED IN ANY WAY WITHOUT THE CONSENT OF THE ENGINEER. THIS DRAWING SHALL NOT BE SCALED. © COPYRIGHT 2021 CARTER ENGINEERING GROUP, LLC.

GEORGIA811 www.Georgia811.com
Contact 811 before you dig.

STAMP:

FOR REFERENCE ONLY
PRELIMINARY
LEVEL II CERTIFIED
DESIGN PROFESSIONAL # 2061
ISSUED: 11/2/2020 EXPIRES: 11/2/2023

RELEASE DATES:

REV #	DATE	DESCRIPTION

MWA Macon Water Authority

CLIENT:
MACON WATER AUTHORITY
MACON, GA

PROJECT:
WATER MAIN RELOCATION SR 87/ RIVERSIDE DRIVE AT ARKWRIGHT RD - GDOT PI 0013921

MACON, GA

DRAWN BY:	CHECKED BY:
CADD	DLC
PROJECT NUMBER:	DATE:
M0175.054	12/14/2022

GRAPHIC SCALE:

SCALE: AS SHOWN

DRAWING TITLE:
JACK AND BORE CROSS SECTION

DRAWING NUMBER:
C2.3

M0175.054 Detail.dwg

Plotted:12/27/2022 01:43:52 PM By:Jake Wood Paper Size:None_user_media Device Name:None Style:CS 253 Plot.ctb Scale:1:80
P:\M0175 - MACON WATER AUTHORITY - 130W\M0175.054 SR87 at Rose Rd Roundabout PI 0013921\CADD\M0175.054 Detail.dwg, C2.3 BORE XSECTION, Last Save:Dec 27,2022 1:41:41pm By:jaewood